ESE280 Embedded Microcontroller Systems Design I

Spring 2025, K. Short revised November 24, 2025 7:39 pm

PRELIMINARY PRELIMINARY PRELIMINARY PRELIMINARY PRELIMINARY

Laboratory 12: Inventory System II - LoraWAN Feature

To be performed the week starting November 30th.

Prerequisite Reading

1. Lecture 19: Inventory System II - LoraWAN
2. AVR128DB48 Data Sheet, Section 27: USART - Universal Synchronous and Asynchronous Receiver and Transmitter.
3. REYAX RYLR896 UART Interface 868/915 MHz LoRa Antenna Transceiver Module.
4. REYAX AT Command Guide.
5. LoRa Wikipedia https://en.wikipedia.org/wiki/LoRa#LoRaWAN
6. *Silicon Labs CP2102 Single-Chip USB-to-UART Bridge Data Sheet
7. *SEMTECH SX1276 Low Power Long Range Transceiver

* optional

Tasks
Task 1: Configuring Your REYAX RYLR896 Module
Task 2: Sending Inventory Data to Base Station via RYLR896 Module
Task 3: Resetting Your RYLR896 Back to Its Factory Settings

Overview
When two devices communicate using USARTs there must be a communications channel that connects the two USARTs. Previously, we have used only direct wire channels (connections) operating at the logic levels of the USARTs involved.

Wire channels are not appropriate for all applications, especially those involving relative large distances between the transmitter and receiver. Transceiver modules, which contain their own microcontrollers, are available to allow use of other types of communications channels. These channels might be fibre optic, infrared, wireless (RF), cellular, or one of many other types.

The RF types include Zigbee, LoRaWAN, and others. In each case, the communications modules have a direct wire interface on one side and drivers/transceivers for the desired communications channel on the other. The direct wire interfaces are available in different protocols, such as asynchronous serial, I2C, and SPI. These modules are usually **transceivers**, so they can both transmit and receive over the communications channel.

LoRa (from "**long range**") is a physical proprietary radio communication technique. It is based on **spread spectrum modulation** techniques derived from **chirp spread spectrum (CSS)** technology. Since LoRa defines only the lower physical layer, the upper networking layers were lacking. **LoRaWAN** is one of several protocols that was developed to define the upper layers of the network[5].

We will be using a REYAX RYLR896 LoraWAN module, which has an asynchronous serial interface that uses 0 to 3.3V logic levels.

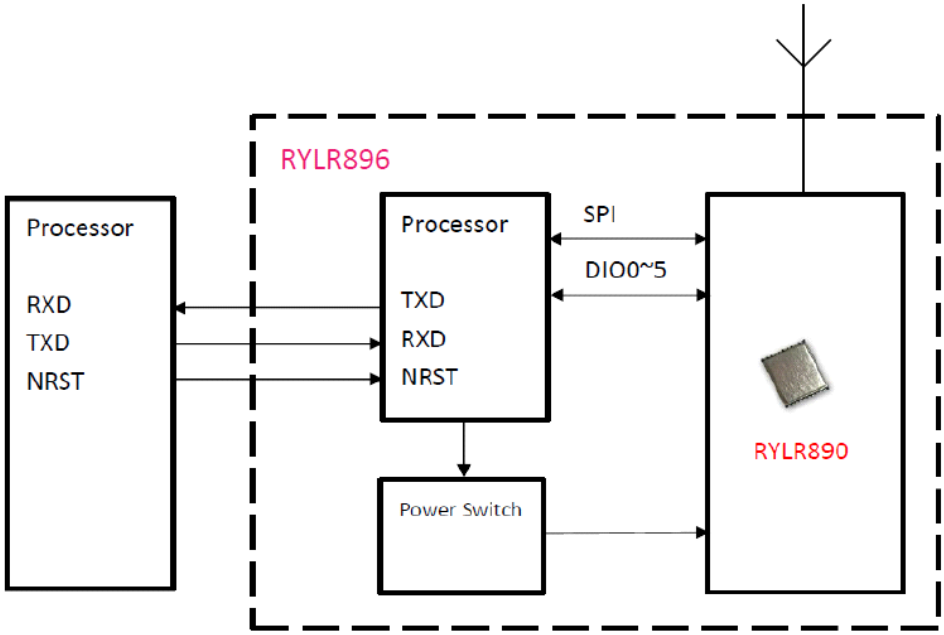

Design Tasks
The designs in this laboratory involve writing programs to configure USART2 to transmit inventory data over a LoRaWAN channel implemented using a RYLR896 Module transceiver. You will verify the results of your work using the Saleae logic analyzer.

A base station with its own RYLR896 Module transceiver will receive the data you have transmitted and display it on a PC monitor.

Design Task 1: Configuring Your REYAX RYLR896 Module
Before building prototype systems using a particular LoRaWAN module you want to verify that the module itself basically works. As always, you want to accomplish this verification without having to depend on other unverified systems. To ultimately verify a LoRaWAN module you need at least two of them, one to transmit and the other to receive. If both of the modules are new to you, then you have a bit of a problem. If you have one transmit and the other receive and it works, then you know that one of them is able to transmit successfully and the other is able to receive successfully. If it doesn't work, then you don't know which module is bad.

To keep things simple to start, we test our RYLR896 to see if it can communicate via its asynchronous serial interface. This can be done using a single RYLR896 and a terminal emulator. A block diagram of this follows.

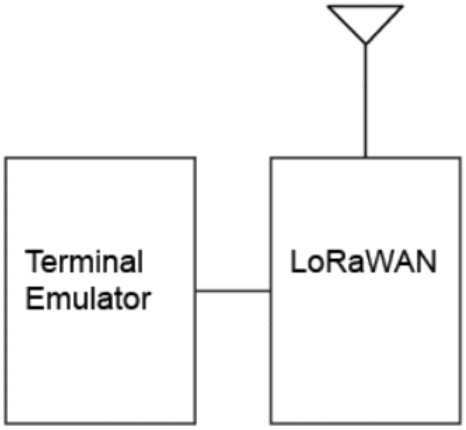

For Task 1 your RYLR896 must be able to communicate over its asynchronous serial interface.

RYLR896 modules have an address. Their default address is 0 for all modules. For the Base Station to identify a message from a specific student's RYLR896, each RYLR896 must use a unique address. Fortunately, the RYLR896's AT Command set has a command to let us set the address of a RYLR896.

The simplest way to initially send AT Commands to the RYLR896 is manually using a USB to UART converter board or cable and a terminal emulator. We will use a terminal emulator named CoolTerm. The USB to UART converter board we will use is the **HiLetgo CP2102 MICRO USB to UART TTL Module 6 Pin Serial Converter**.

As can be seen from the figure below this CP2102 module has a micro USB connector that can be used to connect it to the laboratory computer via USB and, therefore, to CoolTerm. It has two output power pins one 3.3V and one 5.0V. You must draw a schematic showing the connection between a CP2102 board and your RYLR896. **The 3.3V output from the CP2102 board must be used to power the RYLR896**. This circuit must provide communication between your laboratory computer and the RYLR896. In the laboratory, you will build this circuit on your breadboard as a circuit independent of any other circuitry on your breadboard. You will plug your RYLR896 into this circuit when you want to configure it using AT Commands from CoolTerm. When you do

this task in the laboratory you must unplug you RYLR896 from the Curiosity board circuit and plug it into your CP2102 circuit.

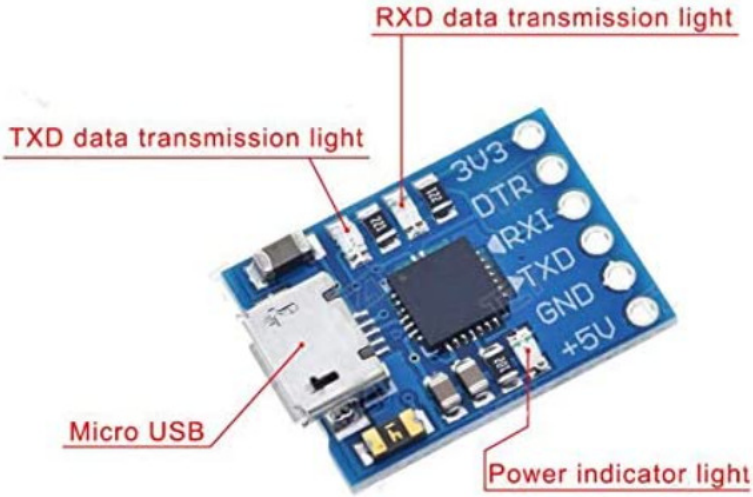

You must configure your RYLR896's address to be equal to a unique bench related address. The details for doing this are described in the Laboratory Task 1 description.

In Task 2 of this laboratory a predesigned **base station** receives messages from your RYLR896. All students must have their RYLR896's configured to its bench related address.

To set your RYLR896's address, you must plug your RYLR896 to the Silicon Labs CP2102 Single-Chip USB-to-UART Bridge circuit. Then you can use the CoolTerm emulator to send configuration commands to the RYLR896.

Draw a schematic for the connection of a RYLR896 to a CP2102 bridge that allows bidirectional communication between the two. You may have to create your own RYLR896 KiCad schematic symbol.

Submit your schematic as part of your prelab.

Design Task 2: Sending Inventory Data to Base Station via RYLR896 Module.
In the laboratory we will provide a single known good transceiver that receives messages from the student benches. This transceiver will be referred to as the **Base Station**. After your RYLR896 is configured you must use this same circuit to send transmissions to the Base Station. The Base Station's CP2102 will display the messages it receives on the CoolTerm terminal emulator. You will perform both of these verifications. Note that the RYLR896's default frame format is 8N1.

Draw a schematic of the required interface of the RYLR896 to an AVR128DB48 Curiosity board.

Revise your program from Laboratory 11 so that after the symbol has been scanned and the operator has pressed the ENTER key, the inventory data is sent to the base station using the AT+SEND command. Name this revised program `send_inventory`.

AT+SEND=<Address>,<Payload Length>,<Data>

The base stations address will be 100.

11. **AT+SEND** Send data to the appointment Address

Syntax	Response
AT+SEND=<Address>,<Payload Length>,<Data> <Address>0~65535, When the <Address> is 0, it will send data to all address (From 0 to 65535.) <Payload Length>Maximum 240bytes <Data>ASCII Format Example : Send HELLO string to the Address 50, AT+SEND=50,5,HELLO	+OK
AT+SEND?	+SEND=50,5,HELLO

For this application <Data> is Count = <value>, ID = <barcode>.

Submit your schematic and list file as part of your prelab.

Design Task 3: Resetting Your RYLR896 Back to Its Factory Settings

We have a limited number of RYLR896s at this point. So, the RYLR896 that you used must be used by a student in the other laboratory section. As a result, you must reset the RYLR896 back to its factory setting after you have completed the first three tasks or before your laboratory session ends. To do this you have to plug the RYLR896 back in the circuit you built for Task 1 and use the AT command AT+FACTORY to return the RYLR896' settings to their values when it left the REYAX factory.

Laboratory Activity

Laboratory Task 1: Configuring Your REYAX RYLR896 Module

Add the RYLR896 module and CP2102 to your breadboard. Power the RYLR896 from the 3.3V output of the CP2102. Connect the Saleae Logic Analyzer to the RYLR896's TXD output. Do not connect the RYLR896 to the microcontroller. Build this circuit on your breadboard away from the Curiosity board, since it will not be connected to it. This circuit should be in a separate position on the breadboard and have a prewired space for you to plug in your RYLR896 into.

Have a TA verify your circuit and its wiring before you connect power to the CP2102 board.

The next thing you have to do is configure your RYLR896 using the CoolTerm terminal emulator. Follow the procedure that follows for this.

Configuring the RYLR896 Using CoolTerm

Plug the CP2102 into your bench computer using a USB A to Micro B cable. Open the CoolTerm application by clicking on its icon on your computer's desktop.

The application will open.

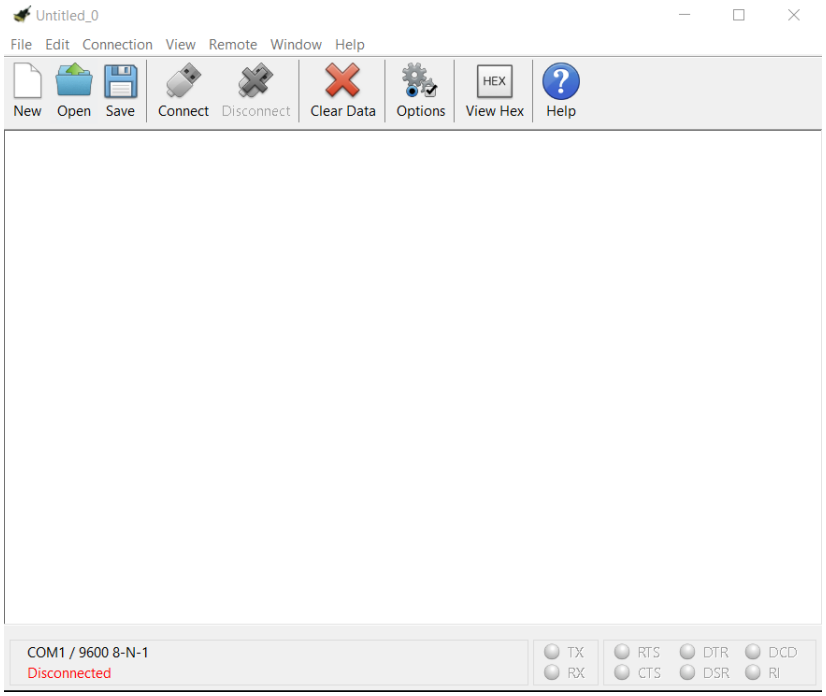

Click on the Options button in the toolbar and select Serial Port from the selection box on the left side of the window.

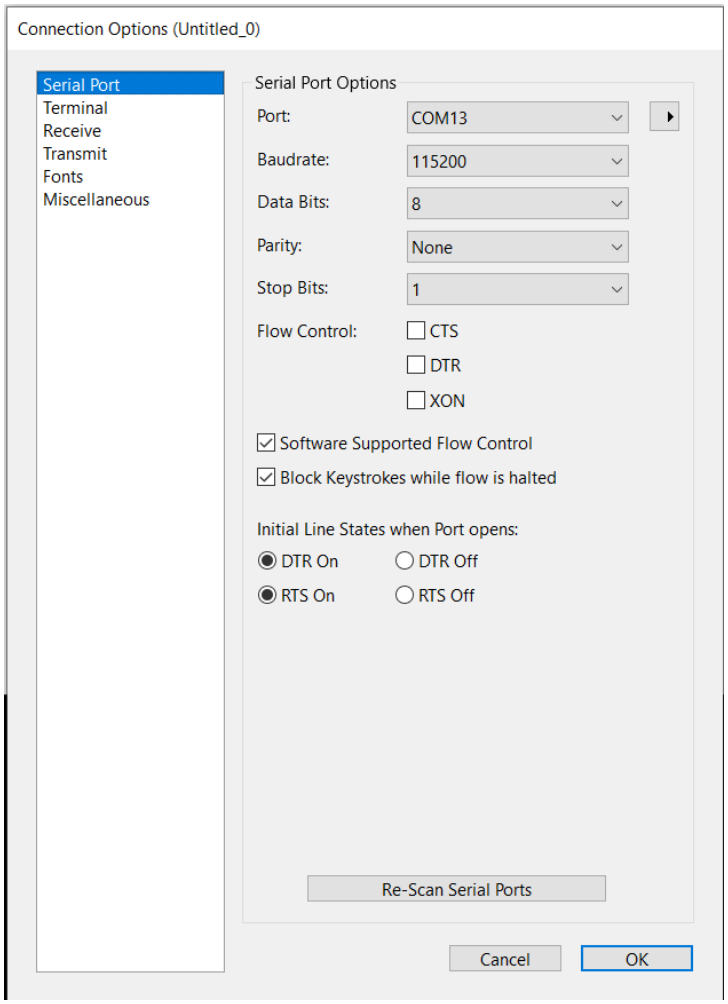

Select the COM port from the drop down selection box and set the frame format. Your COM port number in the laboratory will probably be different from the one shown in the screen capture above. In Windows you can go to **Device Manager** to see which COM port has the **Silicon Labs CP210x** connected to it.

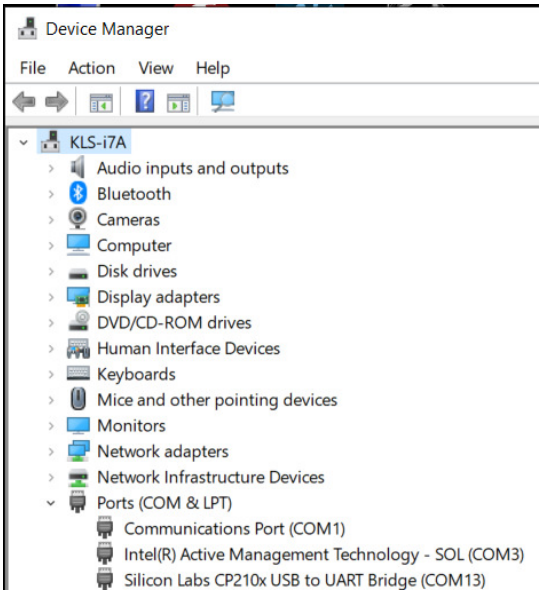

Or, you can to the same thing by going to Settings > Devices > Bluetooth and other devices and look toward the bottom of the listing. The COM port that has the CP210x connected to it is the one you want to use. After setting the frame format as shown in the screen capture above, click OK.

Next click the Connect button in the toolbar. The status bar at the bottom of the window should show that you are connected.

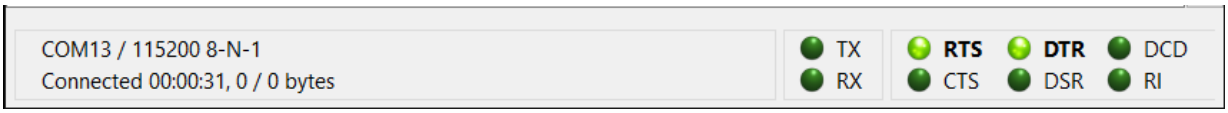

Next select Terminal in the Connection > Options on the left.

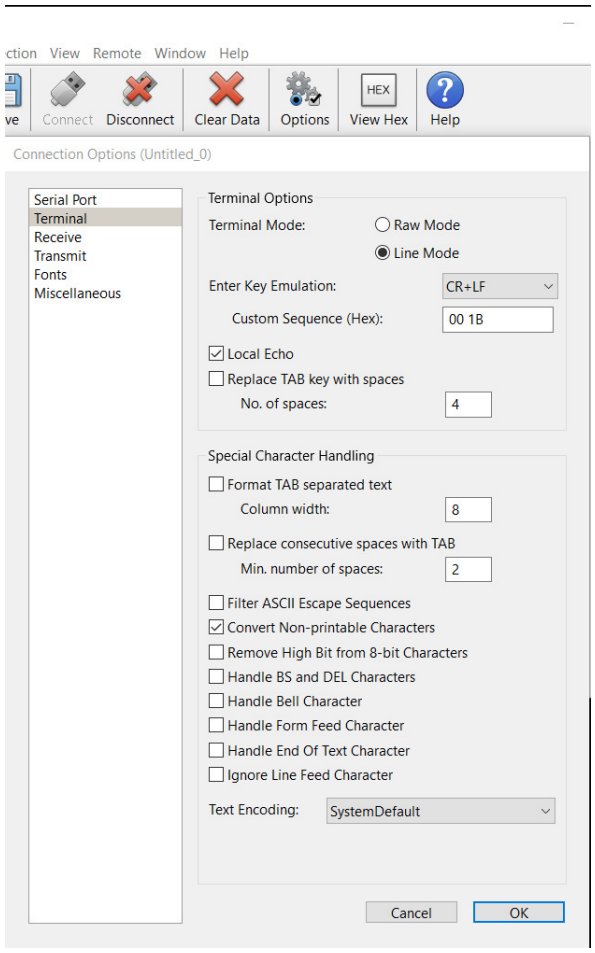

Select Line Mode for the Terminal Mode. Check to make sure the other choices have defaulted to the ones shown in the screen capture above. Click OK.

CoolTerm should now be ready for use. Data to be transmitted is typed in the text box near the bottom of the CoolTerm window, not in the window itself. To see if you can actually communicate with the RYLR896 type the AT command AT into the text box and press the enter key on your keyboard.

You should see the AT command you typed appear in the main window on one line and on the next line you should see the RYLR896's response. This response should be +OK.

Since we may not initially have enough RYLR896's for all laboratory sections they may be shared between sections. If so, you want the RYLR896 that you are going to use to be in a known configuration before use. To accomplish this you must factory reset the RYLR896 to the default settings it had when it left the factory. To do this use the AT Command AT+FACTORY. The response should be +FACTORY.

After factory reset, the RYLR896's address should be 0. You can use the AT+ADDRESS? command to verify this. This is not the address we ultimately want to use.

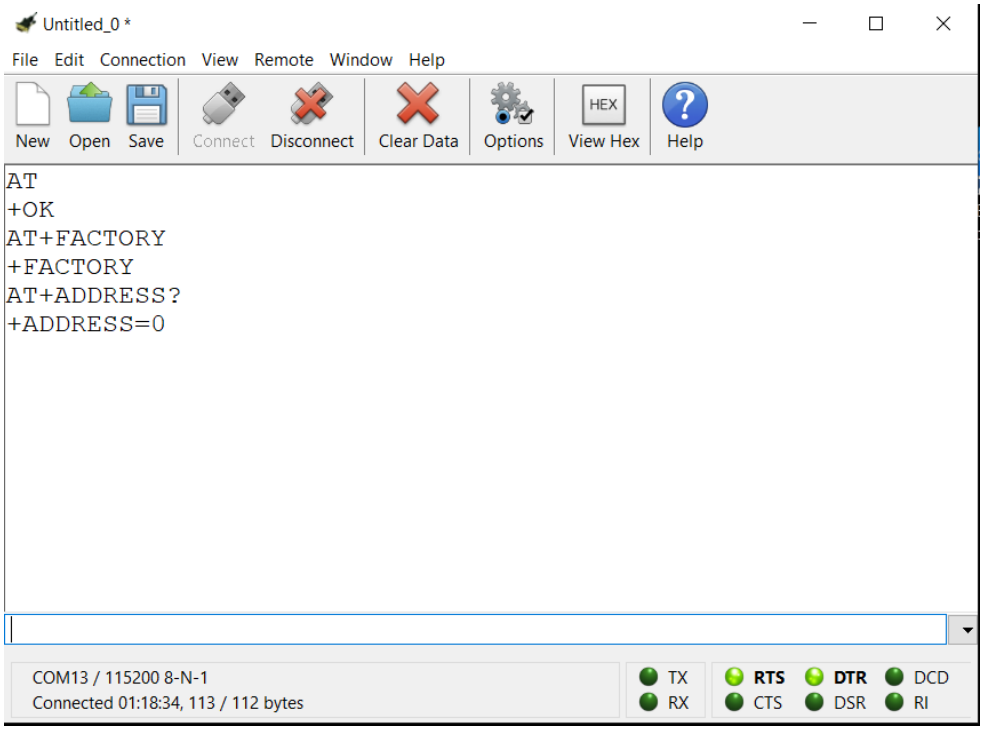

In the REYAX Command Guide it states that the address setting you send to the RYLR896 using the AT+ADDRESS command is stored in EEPROM. As a result, the address setting is memorized. When you use this same RYLR896 again, it will have the address that was last set in it. Note that for some AT commands the setting is stored in EEPROM and for others it is stored in SRAM. So, some settings are remembered after power is turn OFF and others are not. The REYAX Command Guide makes it clear what the case is for each AT command.

Use the AT+ADDRESS command to change the address of your RYLR896 to the required unique address. If you are in room 228, your unique address is your bench number. If you are in room 230 your unique address is your bench number + 30.

Note that many AT commands have a response that is sent back by the RYLR896 when a command is received. Also, many AT commands can use a question mark terminator to get the current setting(s) of the parameters associated with the command.

Next you must set the baud rate of the RYLR896 to 9600 baud. The command for this is AT+IPR=9600. Once you have entered this command the RYLR896's baud rate is 9600 baud, so CoolTerm cannot successfully communicate with the RYLR896 until you change the baud rate to 9600 in CoolTerm.

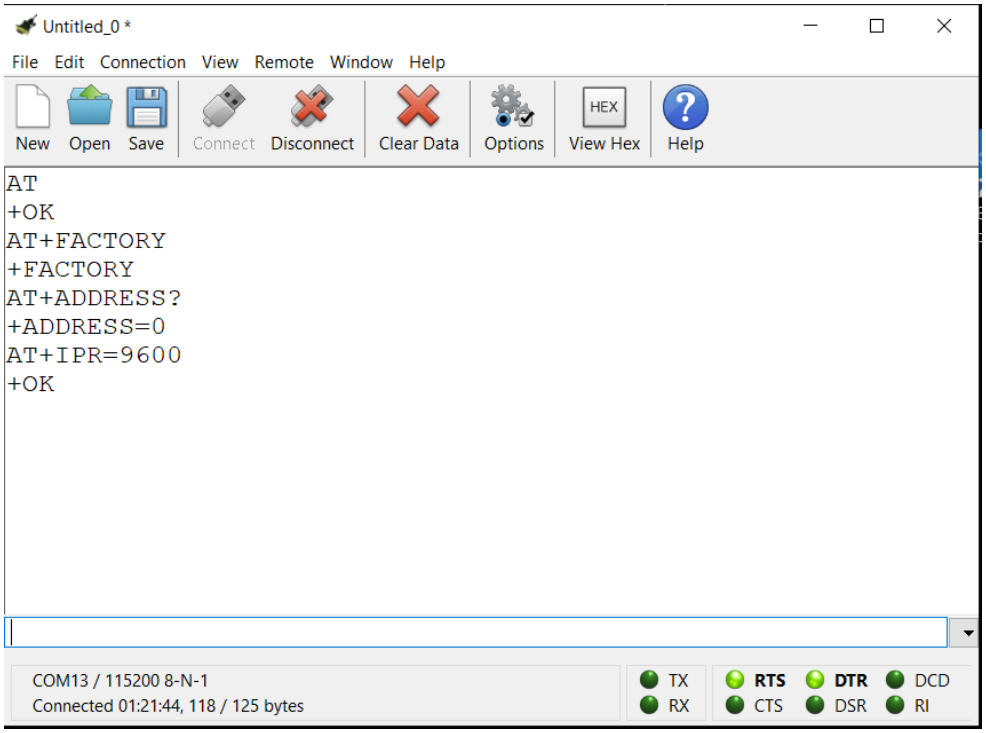

After changing the baud rate in CoolTerm to 9600 you can continue to communicate with the RYLR896. Type in the command AT+IPR? to verify the baud rate of the RYLR896 is now 9600.

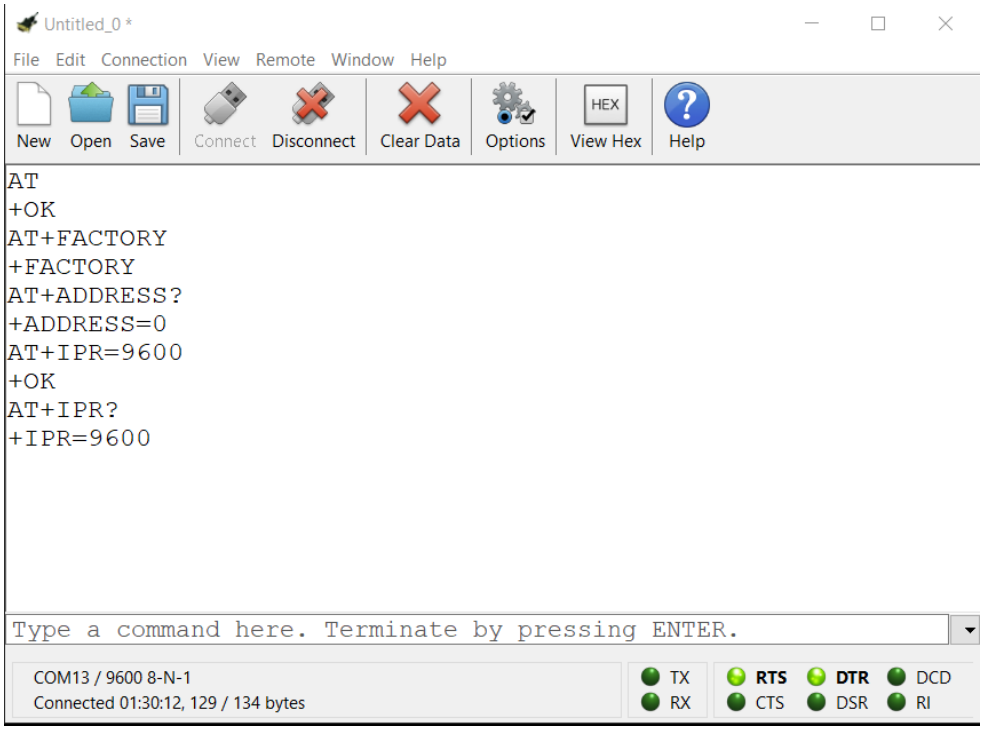

When you have the above data on your CoolTerm window show it to a TA and get the TA's

signature.

Laboratory Task 2: Sending Inventory Data to Base Station via RYLR896 Module.
Build the circuit you designed for Task 2.

Create a project named `send_inventory` using your program `send_inventory`. Build and debug your program.

Configure the Saleae logic analyzer to monitor the data transmitted by USART2. Run and debug your program.

When your system is working correctly and sends the correct inventory data and the Saleae Logic Analyzer and Base Station confirm this, have a TA verify that your system performs as required. Get the TA's signature.

Laboratory Task 3: Resetting Your RYLR896 Back to Its Factory Settings
Put your RYLR896 back in the circuit from Task 1. Use the AT+FACTORY command to reset the device to its factory settings.

Use the AT+FACTORY? to determine that the reset operation was successful.

Demonstrate to a TA and that your RYLR896 has been reset to its factory settings. Remove the power from the RYLR896 and <u>GIVE THE RESET RYLR896 TO THE TA</u>. Get the TA's signature